KUBEBATH
AFFORDABLE LUXURY FOR YOUR BATHROOM

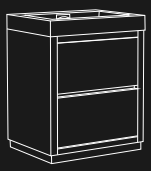

FMB36

NOTE: DIMENSIONS AND TECHNICAL DETAILS ARE SUBJECT TO CHANGE WITHOUT NOTICE
more info: www.kubebath.com

Dimensions:	width	depth	height
inches	35.75"	18.5"	35.125"
mm	908	470	892

COUTERTOP SKU# **BSL36SINK**

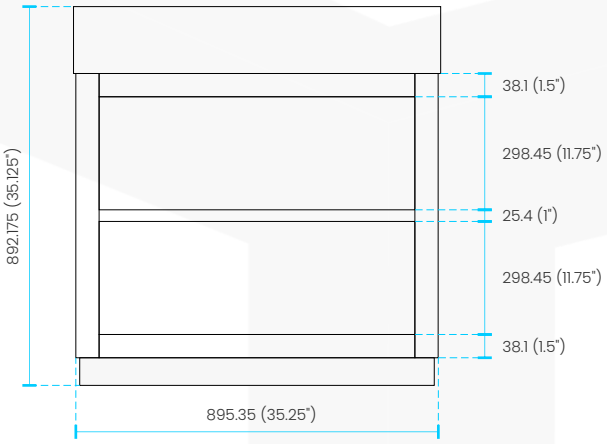

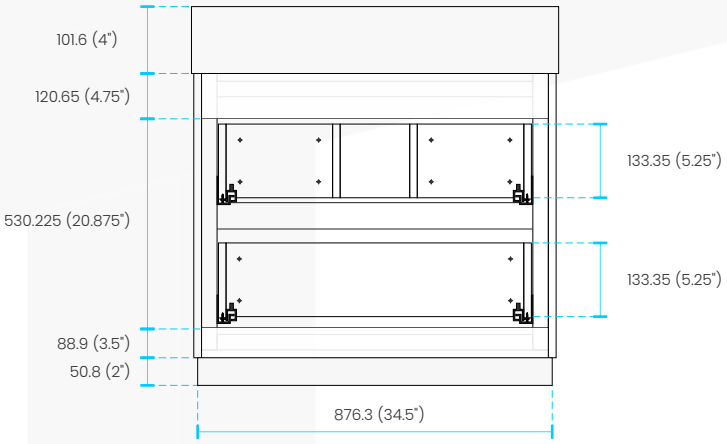

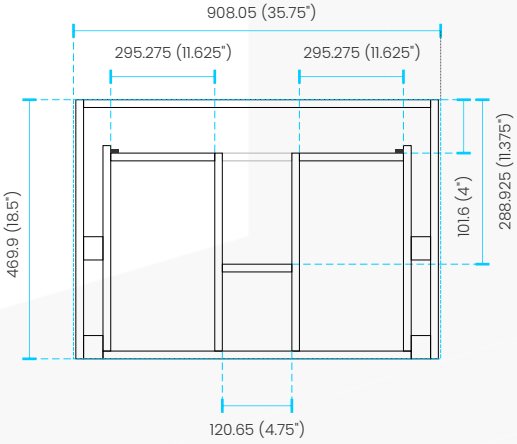

All rights reserved. The authors retain all copyrights in any text, graphic images and photos in this book. No part of this publication may be reproduced or transmitted in any form or by any means, electronic or mechanical, including photocopying, recording, or any information storage and retrieval system, without permission in writing from the authors.